R(H)(V)(M)(S) SERIES

10x10mm Rotary Type

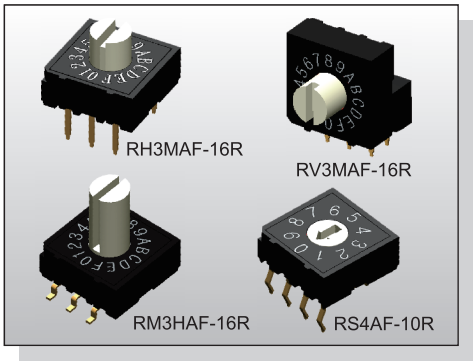

FEATURES

※Vertical and right angel type
※Flush & raised actuator
※BCD; Hexadecimal

APPLICATION

※Building & home automation
※White goods
※Electronic instrument

SPECIFICATION

Contact Rating	25mA, 24V DC
Contact Resistance	100mΩ max.
Insulation Resistance	100MΩ min. 250V DC
Dielectric Strength	250V AC/1 minute
Operating Force	400gf·cm max.
Operating Life	20,000 Steps
Operating Temp.	-25°C ~ +80°C
Storage Temp.	-40°C ~ +85°C

HOW TO ORDER

R □ □ □ A F - □ □ □ - □ - □

- H=Through Hole / V=Right Angle / M=S.M.T. / S=Kink Pin
- Terminals: 4=4x1 / 3=3x3 / 2=3x2
- □=Recessed Actuator / H=Actuator 7.3mm / M=Actuator 3.2mm
- Terminal:Gold Plating
- 10=10 Steps. / 16=16 Steps.
- R=Real Codes. / C=Printing Reverse (Only 16 Steps)
- V=RoHS & Lead Free Solderable / Q=Halogen Free
- Package: B=Tube / T/R=Tape & Reel <SMT Only>

PACKAGE

<Tube>
48 pcs
<Tape & Reel>
750 pcs/reel (recessed actuator)
500 pcs/reel (3.2mm actuator)
250 pcs/reel (7.3mm actuator)

RH2

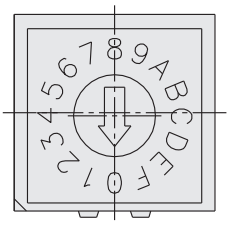
RH2AF-16R

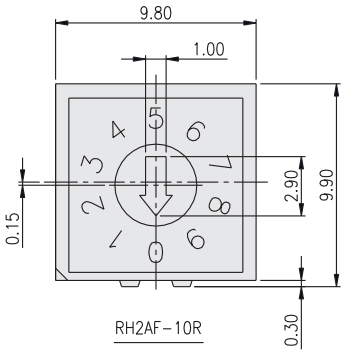

RH2AF-10R

○ ON
● OFF

TYPE	POSITION □□R	POSITION 16C	CODE 1	CODE 2	CODE 4	CODE 8
10R	0	F	●	●	●	●
	1	E	○	●	●	●
	2	D	●	○	●	●
	3	C	○	○	●	●
	4	B	●	●	○	●
	5	A	○	●	○	●
	6	9	●	○	○	●
	7	8	○	○	○	●
	8	7	●	●	●	○
	9	6	○	●	●	○
16R,C	A	5	●	○	●	○
	B	4	○	○	●	○
	C	3	●	●	○	○
	D	2	○	●	○	○
	E	1	●	○	○	○
	F	0	○	○	○	○

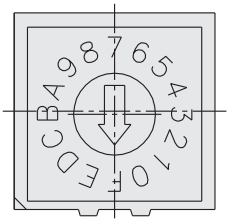
RH2AF-16C

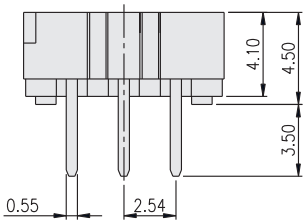

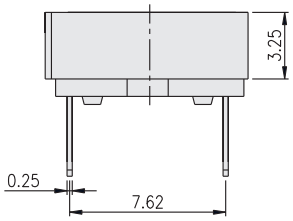

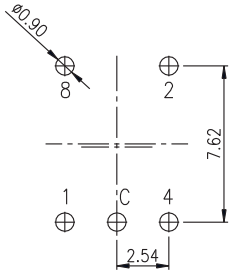

P.C.B. LAYOUT

RM3

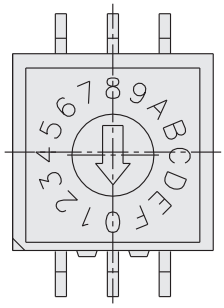

RM3AF-16R

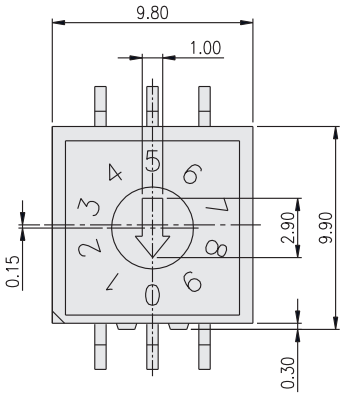

RM3AF-10R

○ ON
● OFF

TYPE	POSITION □□R	POSITION 16C	CODE 1	CODE 2	CODE 4	CODE 8
10R	0	F	●	●	●	●
	1	E	○	●	●	●
	2	D	●	○	●	●
	3	C	○	○	●	●
	4	B	●	●	○	●
	5	A	○	●	○	●
	6	9	●	○	○	●
	7	8	○	○	○	●
	8	7	●	●	●	○
	9	6	○	●	●	○
16R,C	A	5	●	○	●	○
	B	4	○	○	●	○
	C	3	●	●	○	○
	D	2	○	●	○	○
	E	1	●	○	○	○
	F	0	○	○	○	○

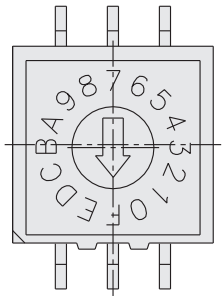

RM3AF-16C

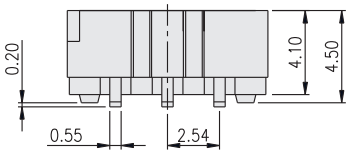

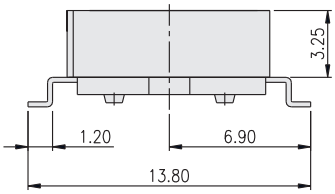

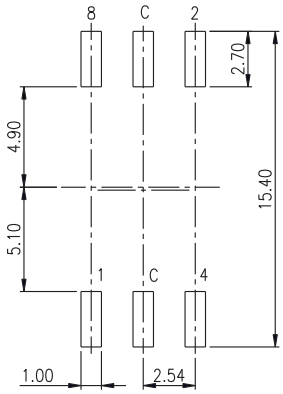

P.C.B. LAYOUT

RV4

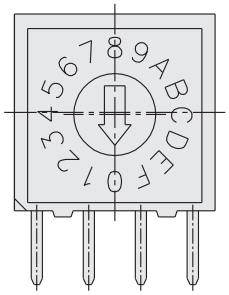

RV4AF-16R

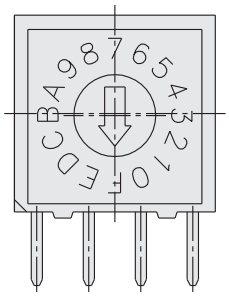

RV4AF-16C

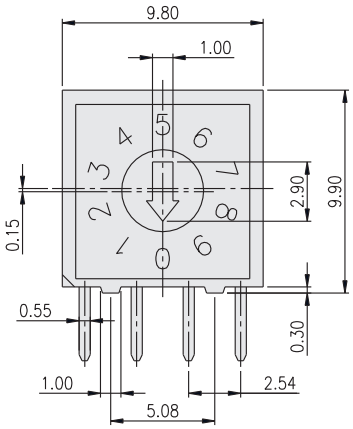

RV4AF-10R

○ ON
● OFF

TYPE	POSITION □□R	POSITION 16C	CODE 1	CODE 2	CODE 4	CODE 8
10R	0	F	●	●	●	●
	1	E	○	●	●	●
	2	D	●	○	●	●
	3	C	○	○	●	●
	4	B	●	●	○	●
	5	A	○	●	○	●
	6	9	●	○	○	●
	7	8	○	○	○	●
	8	7	●	●	●	○
	9	6	○	●	●	○
16R,C	A	5	●	○	●	○
	B	4	○	○	●	○
	C	3	●	●	○	○
	D	2	○	●	○	○
	E	1	●	○	○	○
	F	0	○	○	○	○

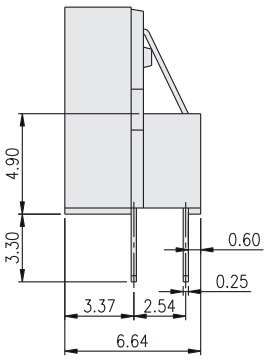

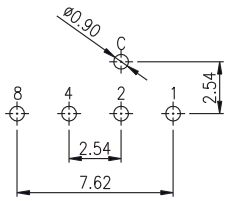

P.C.B. LAYOUT

RS2

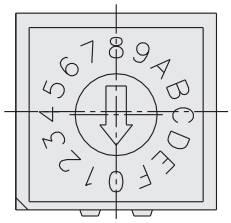

RS2AF-16R

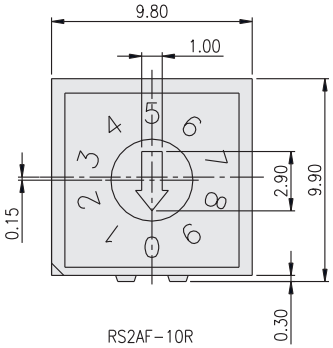

RS2AF-10R

○ ON
● OFF

TYPE	POSITION	CODE 1	2	4	8
10R	0	●	●	●	●
	1	○	●	●	●
	2	●	○	●	●
	3	○	○	●	●
	4	●	●	○	●
	5	○	●	○	●
	6	●	○	○	●
	7	○	○	○	●
	8	●	●	●	○
	9	○	●	●	○
16R	A	●	○	●	○
	B	○	○	●	○
	C	●	●	○	○
	D	○	●	○	○
	E	●	○	○	○
	F	○	○	○	○

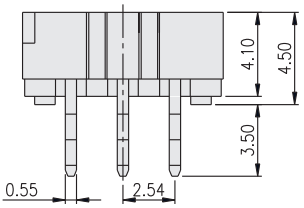

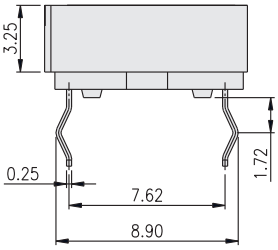

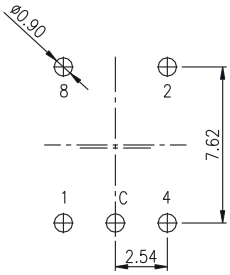

P.C.B. LAYOUT